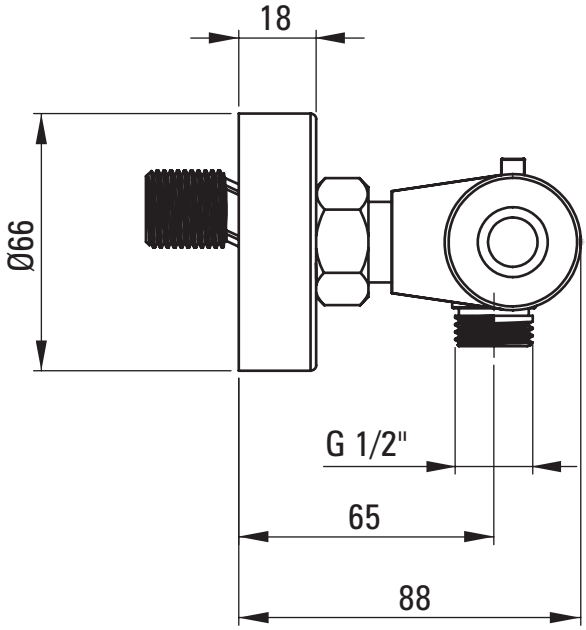
18
Ø66
G 1/2"
65
88

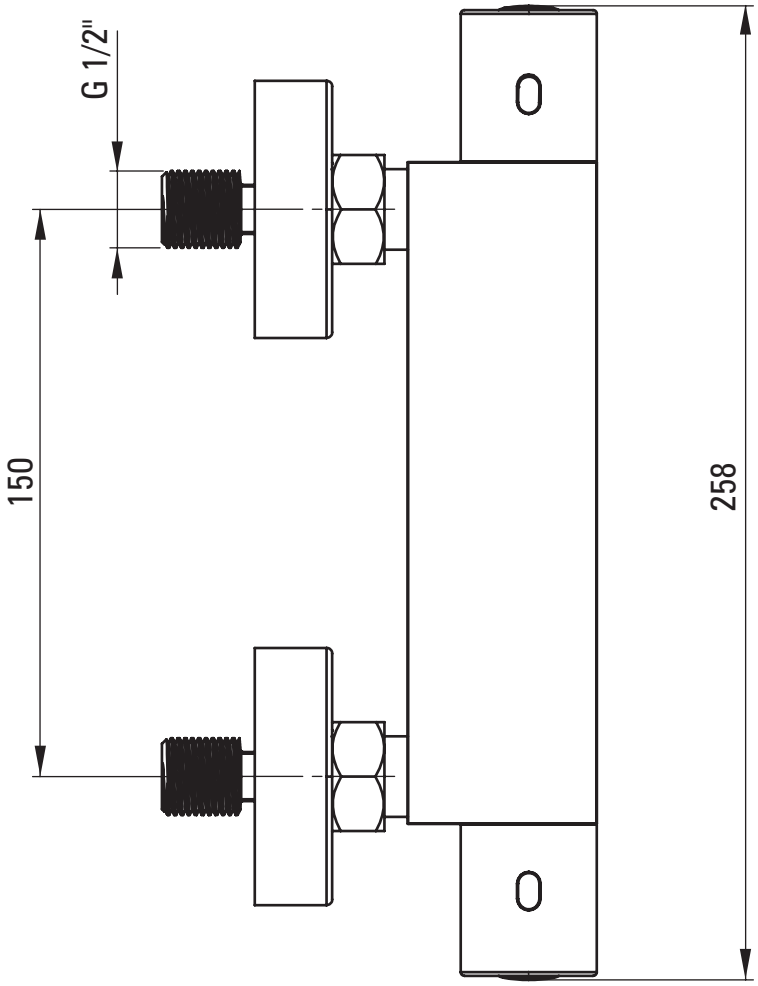
G 1/2"
150
258